CONNECTION DIAGRAM FOR SINGLE VOLTAGE, 3 PHASE MOTORS

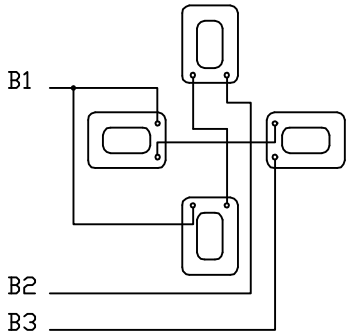

BRAKE COIL CONNECTIONS

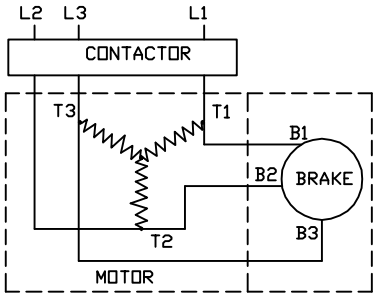

SINGLE VOLTAGE MOTOR & BRAKE ON 208V OR 575V

CONNECTION DIAGRAM FOR SINGLE PHASE MOTORS

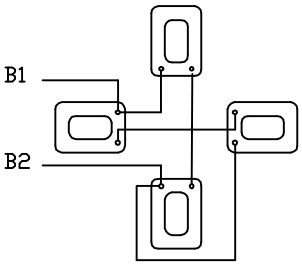

BRAKE COIL CONNECTIONS

CONNECTION DIAGRAM FOR DUAL VOLTAGE, 3 PHASE MOTORS

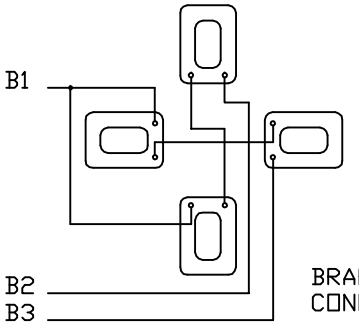

BRAKE COIL CONNECTIONS

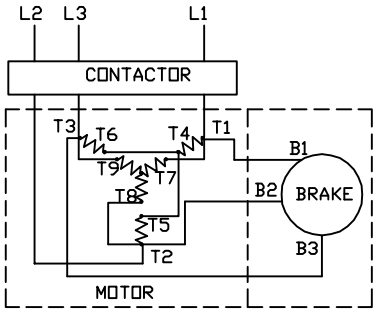

460/230 VOLTAGE MOTOR & BRAKE ON 230V

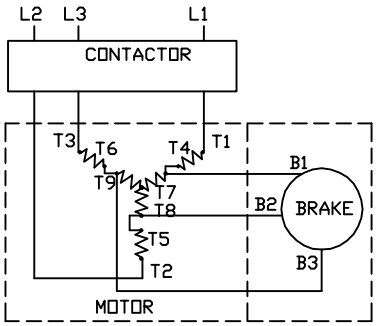

460/230 DUAL VOLTAGE MOTOR WITH BRAKE ON 230V & MOTOR ON 460V

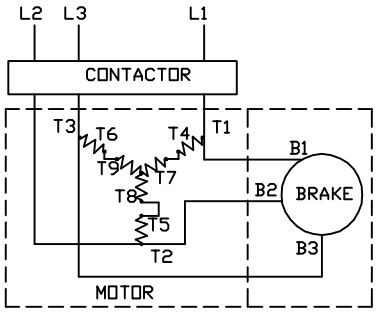

460/230 VOLTAGE MOTOR & BRAKE ON 460V

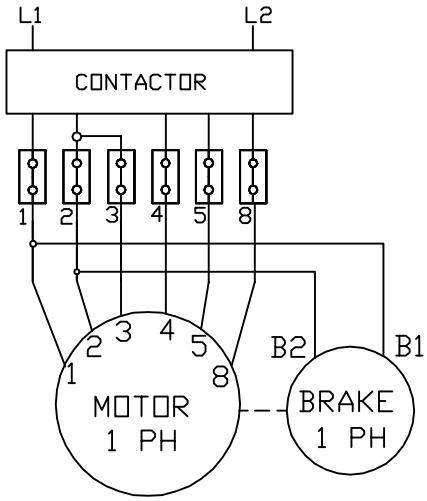

SINGLE PHASED MOTOR & SINGLE PHASED BRAKE

CONNECTION DIAGRAM FOR 2 SPEED, 3 PHASE MOTORS

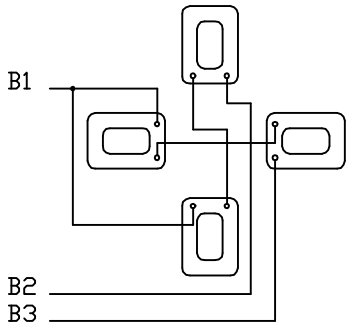

BRAKE COIL CONNECTIONS

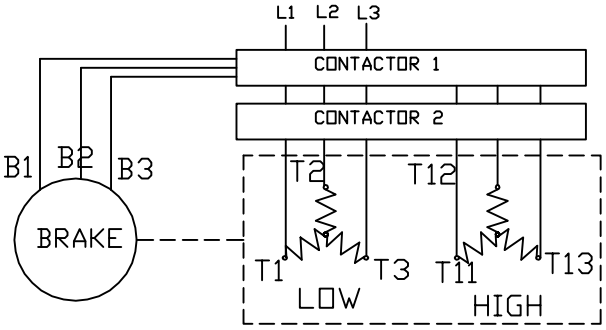

2 SPEED 460/230 VOLTAGE MOTOR & BRAKE ON 460V OR 230V
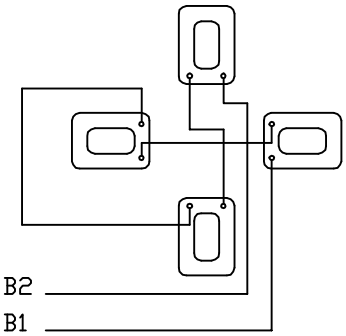
CONNECTION DIAGRAM FOR DC COIL CONFIGURATION